SHARP

Be Original.

MX-M356NV
MX-M315NV
MX-M265NV

Digital Multifunctional System

Full-Function Efficiency and Ease of Use from an All-Around Player

Balancing Document Demands and Ease of Use—Efficiency in Action

Sharp's MX-M356NV/M315NV/M265NV delivers the ideal balance of high performance and exceptional ease of use. Four-in-one function and an array of user-friendly features make this B/W MFP a practical and productive addition to small or medium-size offices, where it can boost efficiency as the central document solution, and to larger workplaces, where it can quickly handle the diverse document demands of small workgroups.

PRODUCTIVITY

Super-Efficient Output

The MX-M356NV/M315NV/M265NV delivers a fast output of 35/31/26 ppm*. And the first copy comes out in just 4.0/4.3/4.3 seconds to save valuable time when performing multiple short-run jobs.

*A4 (8 1/2" x 11"), long-edge feeding

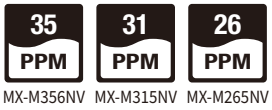

MX-M356NV MX-M315NV MX-M265NV

Standard-Equipped RSPF and Duplex Module

The MX-M356NV/M315NV/M265NV comes equipped with a 100-sheet RSPF (reversing single pass feeder) and has a built-in stackless duplex module for making two-sided copies and printouts. For added convenience, the MX-M356NV/M315NV/M265NV also works as a full-colour network scanner.

Handy USB Ports

One of the two USB ports on the MX-M356NV/M315NV/M265NV is located at the front of the MFP to the side of the control panel. It comes in handy when printing data directly from USB memory devices and when scanning directly to such devices.*

*USB direct printing requires optional MX-HD15 N. Direct PDF printing additionally requires optional MX-PK11. Scan to USB Memory does not require any options.

Inner Finisher and Job Separator Options

With the help of the space-efficient Finisher option, the MX-M356NV/M315NV/M265NV can handle document sorting and stapling jobs with automated ease. The handy Job Separator option prevents copy/print/fax jobs from getting mixed together in the main tray by letting you send one of the job types to the Job Separator tray.

Large Paper Capacity

For large-volume jobs and a wider selection of available paper sizes, the MX-M356NV/M315NV/M265NV can accommodate two types of extra paper drawers for a total paper capacity of 2,100 sheets.

Other Key Features

- **Mixed Size Original Copy and Scan** automatically distinguishes documents of mixed sizes* fed through the RSPF.
  *Some restrictions apply when combining paper sizes of different format series.
- **Multi-Shot** copying and **N-up** printing
- **Card Shot** enables easy copying and scanning of both sides of a card onto a single page.
- **Job Build** makes it possible to do large-volume copy/scan jobs that exceed the RSPF's 100-sheet* paper capacity.
  *A4 (8 1/2" x 11"), 80 g/m²

SUPERB IMAGE QUALITY

High-Resolution Output

The MX-M356NV/M315NV/M265NV's print engine provides 1,200 x 600 dpi printing for ultra-clear image quality. Fine lines and small text come out crisper and easier to read.

PCL 6 and PostScript® 3™

The MX-M356NV/M315NV/M265NV supports PCL 6 for enhanced font compatibility. And the optional MX-PK11 PS3 Expansion Kit brings compatibility with PostScript® 3™ for improved graphics handling.

Enhanced Scanning

Through an advanced three-step process, **Auto Colour Mode** provides fully automated colour scanning. Here's how it works: Auto Colour Selection automatically determines whether a page is colour or B/W. Page contents are then analysed to distinguish between different components, such as photos and text, and the appropriate scan mode is selected. Finally, Background Suppression automatically removes unnecessary background colour.

Auto Colour Mode

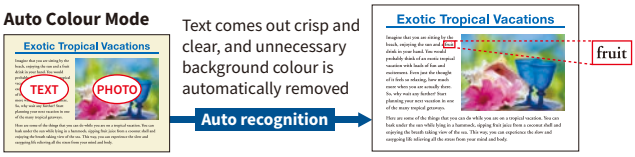

Original Scanned image

EASE OF USE

User-Friendly Control Panel

The MX-M356NV/M315NV/M265NV is equipped with a 7.0-inch WVGA touchscreen colour LCD that provides easy navigation of MFP functions and settings. Displaying thumbnails* and up-close previews* of Document Filing* data files on the MFP's LCD makes file searching easy and convenient. It also lets users confirm scan settings and other items before copying, scanning, or saving documents to the MFP's hard disk. For added ease of use, two LED lamps—one red and the other green—on the control panel light up to notify users of machine/job status.

*Requires optional MX-HD15 N.

Preview*

*Copy previews are in B/W.

Easy-Grip Handles

Easy-grip handles allow the paper drawers to be grasped from the top as well as the bottom for easy opening and closing.

OTHER KEY FEATURES

INFORMATION SHARING

Multiple Distribution of Scanned Files

You can choose different ways to distribute your scanned documents: for example, send as an e-mail attachment, scan directly to an FTP server for storage, or scan to external memory.

Sharpdesk

With Sharpdesk integrated document management software, scanned files can be organised, edited, converted, and combined with ease, and Full Text Search can bring easy document retrieval.

Document Filing*

Document Filing allows processed data to be saved in designated folders on the MFP's hard disk, where they can be instantly recalled for printing and sending at a later time.

*Requires optional MX-HD15 N.

Versatile Fax Functions (option)

- **Super G3 Fax** with duplex transmission/reception can send and print out two-sided documents.
- **Internet Fax*** allows economical fax transmission/reception between this unit and other Internet fax machines.
- **Inbound Routing*** lets you check incoming faxes via e-mail before printing, or forward them to another FTP server, fax machine, etc.

*Additionally requires optional MX-HD15 N.

EXPANDABILITY

Sharpdesk Mobile*

Sharpdesk Mobile is a mobile print/scan application that connects the MFP to mobile devices via wireless LAN.

*Availability varies by country/region. For details, see the Sharpdesk Mobile support Web site: http://sharp-world.com/products/copier/docu_solutions/mobile/sharpdesk_mobile/

Sharp OSA* (Open Systems Architecture)

Sharp OSA allows integration with network applications.

*Requires optional MX-HD15 N as well as MX-AMX2 and/or MX-AMX3.

MULTI-LAYERED SECURITY

Network Security and Access Control

- **IP/MAC Address Filtering** prevents unauthorised access to networked MFPs by allowing access only to PCs that have a registered IP or MAC address.
- **SSL** (secure sockets layer) and **IPsec** data encryption technologies ensure secure network communications.
- **User Authentication** covering up to 1,000 users prevents unauthorised MFP use by requiring access passwords.

Data Protection

- Job data is automatically encrypted before being saved to the MFP's internal storage. Once a job is finished, its encrypted data is erased by up to 10 automatic overwrites.

  Note: Requires optional MX-HD15 N. Contact a Sharp customer representative for details on activating these security functions.
- **Confidential Print*** function requires the user to enter in a password at the machine before printing can begin.

  *Requires optional MX-HD15 N.
- Retained data can be initialised when it's time to replace the MFP, preventing the leakage of confidential information.

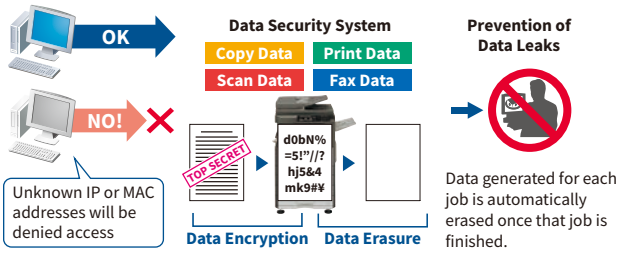

ENVIRONMENT-FRIENDLY

Outstanding Eco Technologies

- **Power ON/OFF Schedule** function automatically turns the MFP on or off per administrator-set schedules.
- Based on prior usage patterns, the MX-M356NV/M315NV/M265NV automatically determines the optimal length of time to let elapse before going into auto power shut-off mode, helping reduce overall power consumption.

  Note: Requires optional MX-HD15 N.
- **Eco Scan** function saves energy by keeping the fusing system shut down during jobs that don't require its use.

SPECIFICATIONS (tentative)

General

Type	Desktop
Engine speed	A4 (8 1/2" x 11")*1: Max. 35/31/26 ppm A3 (11" x 17"): Max. 20/17/15 ppm
Control panel display	7.0-inch colour LCD touchscreen
Paper size	Max. A3 (11" x 17"), min. A6*2 (5 1/2" x 8 1/2")
Paper capacity (80 g/m²)	[MX-M356NV/M315NV] Standard: 1,100 sheets (500-sheet tray x 2 and 100-sheet multi-bypass tray) Maximum: 2,100 sheets (1,100 sheets & optional 500-sheet tray x 2) [MX-M265NV] Standard: 600 sheets (500-sheet tray and 100-sheet multi-bypass tray) Maximum: 2,100 sheets (600 sheets & optional 500-sheet tray x 3)
Paper weight	Tray: 55 g/m² to 105 g/m² (13 lbs bond to 28 lbs bond) Multi-bypass tray: 55 g/m² to 200 g/m² (13 lbs bond to 110 lbs bond)
Warm-up time*3	20 sec.
Memory	Standard: 2 GB (copy/print shared) Option: 250 GB HDD*4
Power requirements	Rated local AC voltage ±10%, 50/60 Hz
Power consumption	Max. 1.45 kW (220V to 240V), max. 1.44 kW (110V to 127V)
Dimensions (W x D x H)	MX-M356NV/M315NV: 620 x 617 x 830 mm (24 27/64" x 24 19/64" x 32 11/16") MX-M265NV: 620 x 617 x 730 mm (24 27/64" x 24 19/64" x 28 3/4")
Weight (approx.)	MX-M356NV/M315NV: 51 kg (112.5 lbs) MX-M265NV: 45 kg (99.2 lbs)

Copier

Original paper size	Max. A3 (11" x 17")
First copy time*5	MX-M356NV: 4.0 sec. MX-M315NV/M265NV: 4.3 sec.
Continuous copy	Max. 999 copies
Resolution	Scan: 600 x 600 dpi, 600 x 400 dpi, 600 x 300 dpi*6 Print: 600 x 600 dpi
Gradation	Scan: 256 levels Print: 256 levels (equivalent)
Zoom range	25% to 400% (25% to 200% using RSPF) in 1% increments
Preset copy ratios	Metric: 10 ratios (5R/5E), inch: 8 ratios (4R/4E)

Network Colour Scanner

Scan method	Push scan (via control panel) Pull scan (TWAIN-compliant application)*7
Scan speed*8	[Colour & B/W] MX-M356NV: Max. 56 originals/min. MX-M315NV/M265NV: Max. 31 originals/min.
Resolution	Push scan: 100, 200, 300, 400, 600 dpi Pull scan*7: 75, 100, 150, 200, 300, 400, 600 dpi 50 dpi to 9,600 dpi via user setting*9
File formats	TIFF, PDF, PDF/A, encrypted PDF, JPEG*10, XPS
Scanner utility	Sharpdesk
Scan destinations	Scan to e-mail/desktop/FTP server/network folder (SMB)/ USB drive

Document Filing (optional MX-HD15 N required)

Document filing capacity*11	Main and custom folders: 20,000 pages or 3,000 files Quick file folder: 10,000 pages or 1,000 files
Stored jobs*12	Copy, print, scan, fax transmission
Storage folders	Quick file folder, main folder, custom folder (max. 1,000 folders)
Confidential storage	Password protection (for main and custom folders)

Network Printer

Resolution	1,200 x 600 dpi, 600 x 600 dpi
Interface	USB 2.0, 10Base-T/100Base-TX/1000Base-T
Supported OS*13	Windows Server® 2008, Windows Server® 2008 R2, Windows Server® 2012, Windows Server® 2012 R2, Windows Server® 2016, Windows Vista®, Windows® 7, Windows® 8.1, Windows® 10, Mac OS 10.6, 10.7, 10.8, 10.9, 10.10, 10.11, 10.12
Network protocols*13	TCP/IP (IPv4, IPv6), IPX/SPX (NetWare), EtherTalk (AppleTalk)
Printing protocols*14	LPR, Raw TCP (port 9100), POP3 (e-mail printing), HTTP, FTP for downloading print files, EtherTalk printing, IPP
PDL	Standard: PCL 6 emulation Option: PostScript® 3™ emulation*15
Available fonts	80 fonts for PCL, 136 fonts for PostScript 3 emulation

Facsimile (optional MX-FX11 required)

Compression method	MH/MR/MMR/JBIG
Communication protocol	Super G3/G3
Transmission time	Less than 3 seconds*16
Modem speed	33,600 bps to 2,400 bps with automatic fallback
Transmission resolution	From Standard (203.2 x 97.8 dpi) to Ultra Fine (406.4 x 391 dpi)
Recording size	A3 to A5 (11" x 17" to 5 1/2" x 8 1/2")
Memory	512 MB, max. 1 GB*7
Greyscale levels	Equivalent to 256 levels

*1: Long-edge feeding. *2: Short-edge feeding only. *3: At rated voltage, 23°C (73.4°F). May vary depending on operating conditions and environment. *4: HDD capacity depends on procurement and sourcing status. *5: Long-edge feeding of A4 (8 1/2" x 11") sheets from 1st paper tray, using document glass, MFP in fully ready condition. May vary depending on operating conditions and environment. *6: Not available when using RSPF. *7: Requires optional MX-HD15 N. *8: Based on Sharp's A4 standard chart, using document feeder, long-edge feeding, and one-sided scanning. Using factory default settings with Auto Colour Selection off. Scan speed will vary depending on the type of document and the scan settings. *9: Resolution will vary depending on the size of the scanned area. *10: Colour/greyscale only. *11: Storage capacity will vary depending on the type of document and the scan settings. *12: Some features require option(s). *13: Optional MX-PK11 required for Mac OS and EtherTalk. *14: IPv6 is supported only by LPR printing protocol. *15: Requires optional MX-PK11. *16: Based on Sharp's standard chart with approx. 700 characters (A4 or 8 1/2" x 11" long-edge feeding) at standard resolution in Super G3 mode, 33,600 bps, JBIG compression.

- Design and specifications are subject to change without prior notice.
- PCL is a registered trademark of Hewlett-Packard Company. PostScript 3 is either a registered trademark or trademark of Adobe Systems Incorporated in the US and/or other countries. Windows, Windows Server, and Windows Vista are registered trademarks of Microsoft Corporation in the US and/or other countries. Mac, EtherTalk, and AppleTalk are trademarks of Apple Inc., registered in the US and other countries. All other brand names and product names may be trademarks or registered trademarks of their respective owners.

SYSTEM CONFIGURATION

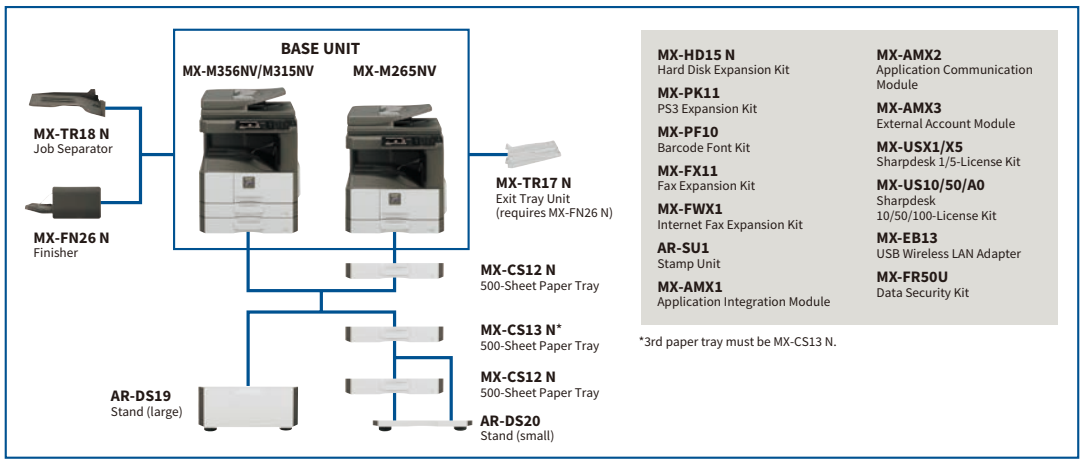

MX-HD15 N Hard Disk Expansion Kit
MX-PK11 PS3 Expansion Kit
MX-PF10 Barcode Font Kit
MX-FX11 Fax Expansion Kit
MX-FWX1 Internet Fax Expansion Kit
AR-SU1 Stamp Unit
MX-AMX1 Application Integration Module
MX-AMX2 Application Communication Module
MX-AMX3 External Account Module
MX-USX1/X5 Sharpdesk 1/5-License Kit
MX-US10/50/A0 Sharpdesk 10/50/100-License Kit
MX-EB13 USB Wireless LAN Adapter
MX-FR50U Data Security Kit

*3rd paper tray must be MX-CS13 N.

Certain options may not be available in some areas.

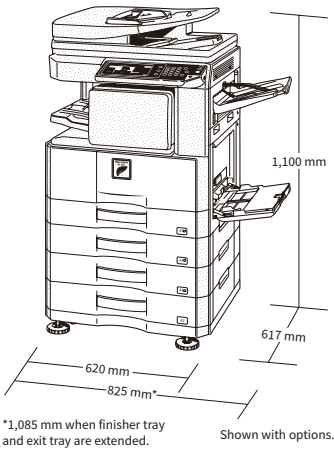

*1,085 mm when finisher tray and exit tray are extended.

Shown with options.

SHARP

SHARP Middle East FZE
P.O.Box 17115 Dubai
Jebel Ali Free Zone, United Arab Emirates
Phone: +971 4 8815311 Fax:+971 4 8871388
e-Mail: bsdmarketing@smef.sharp-world.com

www.sharpmea.com